CNC Procedure 2015_010

Sep 22nd

2015

Spindle/Servo Motor Checking

[Applicable for All Fanuc make motors]

Introduction to Motor Maintenance.

Do not step or sit on a motor.

If you step or sit on a motor, it may get deformed or broken. Do not put a motor on another unless they are in packages.

When storing a motor, put it in a dry (non-condensing) place at room temperature (0 to 40□C).

If a motor is stored in a humid or hot place, its components may get damaged or deteriorated. In addition, keep a motor in such a position that its shaft is held horizontal and its terminal box is at the top.

Do not remove a nameplate from a motor.

If a nameplate comes off, be careful not to lose it. If the nameplate is lost, the motor becomes unidentifiable, resulting in maintenance becoming impossible.
For a nameplate for a built-in spindle motor, keep the nameplate with the spindle drive.

Do not apply shocks to a motor or cause scratches to it.

If a motor is subjected to shocks or is scratched, its components may be adversely affected, resulting in normal operation being impaired. Be very careful when handling plastic portions, sensors and windings, because they are very liable to break. Especially, avoid lifting a motor by pulling its plastic portion, winding or power cable.

Do not conduct dielectric strength or insulation test for a sensor.

Such a test can damage elements in the sensor.

When testing the winding or insulation resistance of a motor, satisfy the conditions stipulated in IEC60034.

Testing a motor under a condition severer than those specified in IEC60034 may damage the motor.

Do not disassemble a motor.

Disassembling a motor may cause a failure or trouble in it. If disassembly is in need because of maintenance or repair, please follow the necessary procedure as per repair factory instruction.

Do not modify a motor.

Do not modify a motor unless directed by FANUC. Modifying a motor may cause a failure or trouble in it.

Use a motor under an appropriate environmental condition.

Using a motor in an adverse environment may cause a failure or trouble in it.
Refer to their respective Descriptions for details of the operating and environmental conditions for motors.

Do not apply a commercial power source voltage directly to a motor.

Applying a commercial power source voltage directly to a motor may result in its windings being burned. Be sure to use a specified amplifier for supplying voltage to the motor.

For a motor with a terminal box, make a conduit hole for the terminal box in a specified position.

When making a conduit hole, be careful not to break or damage unspecified ` portions. Refer to an applicable Descriptions.

Before using a motor, measure its winding and insulation resistances, and make sure they are normal.

Especially for a motor that has been stored for a prolonged period of time, conduct these checks.
A motor may deteriorate depending on the condition under which it is stored or the time during which it is stored.
For the winding resistances of motors, refer to their respective specification chart.

To use a motor as long as possible, perform periodic maintenance and inspection for it, and check its winding and insulation resistances.

Note that extremely severe inspections (such as dielectric strength tests) of a motor may damage its windings. For the winding resistances of motors, refer to their respective specification chart.

MOTOR INSULATION RESISTANCE MEASUREMENT

Measure an insulation resistance between each winding and motor frame using an insulation resistance meter (500 VDC). Judge the measurements according to the following table.

Insulation Resistance (MΩ)	Judgement
>100	Acceptable
10 ~100	The Winding has begun to deteriorating. There is no problem with the performance at present. But sure to perform periodic inspection
1~10	The winding has considerably deteriorated. Special care is in need. Be sure to perform periodic inspection
< 1	Inacceptable. Replace the motor

If the insulation resistance steeply drops within a short period of time, it is likely that liquid such as coolant may have entered from the outside.

How to Measure the insulation resistance:

Connect the power supply lines to the appropriate motor terminals and connectors.

Connect the signal lines to the appropriate connectors.

Before connecting the power supply wiring, check the supply voltage.

Check that the supply voltage is within the range specified in the Descriptions, then connect the power supply lines.

Ensure that the combination of motor and amplifier is appropriate.

Ensure that valid parameters are specified.

Specifying an invalid parameter for the combination of motor and amplifier may not only prevent normal operation of the motor but also result in damage to the amplifier.

Ensure that the amplifier and peripheral equipment are securely connected.

Check that the magnetic contactor, circuit breaker, and other devices mounted outside the amplifier are securely connected to each other and that those devices are securely connected to the amplifier.

Generally, AC Servo/Spindle motors have no parts that wear off or that must be replaced periodically, unlike DC servo motors, which have brushes that must be replaced periodically.
However, you should perform periodic maintenance for servo motors so as to keep their initial performance as long as possible and to prevent breakdowns.
AC servo/spindle motors have precision sensors.
Their incorrect use or damage caused during transportation or assembling can result in breakdowns or accidents.
We recommend that you inspect the servo motors periodically according to the descriptions given below

When you receive an AC servo motor, make sure that below are checked

1. The motor is exactly the one you ordered, in terms of model, shaft and sensor specifications.
2. No damage has been caused on the motor.
3. The servo/spindle motors are strictly inspected before shipment, have to inspect them when you receive them.
4. The servo motors should be kept indoors as a rule. The storage temperature range is -20 to +60°C.
5. Do not place or install AC servo/spindle motors in the place where:
   A. It is extremely humid and dew is prone to form
   B. There is a steep change in temperature.
   C. There is constant vibration, which may cause damage to the shaft bearings, or there is lots of dust and trash.

Before starting operation, or periodically (once a week or month), you should inspect the AC servo motors in terms of the following:

(1) Vibration and noise
Check the motor for abnormal vibration (by the hand) and noise (by the ear) when the motor is:

A. Not rotating
B. Rotating at low speed
C. Accelerating or decelerating

If you find anything unusual, contact your FANUC service staff.

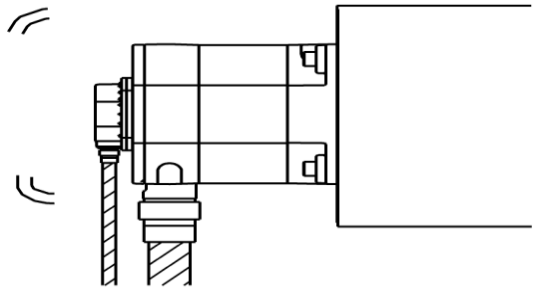

The following lists the ordering specification numbers for maintenance (field replaceable parts in servo motor):

A. Ordering specifications of Pulse coders A860-XXXX-T3X1
B. Oldham's coupling A290-0501-V535

(2) Damage on the outside shell:

A. Check the Pulsecoder cover (red plastic) for crevices and the motor surface (black coating) for scratches and cracks.
B. If you find a crevice in the Pulsecoder cover, you should replace it.
C. For how to replace, see the description about the Pulsecoder replacement
D. If there is a scratch or crack on the motor surface, the motor should repair as required.
E. If coating has come off, dry the portion of interest (or the entire surface) and coat it with paint for machines such as urethane paint.

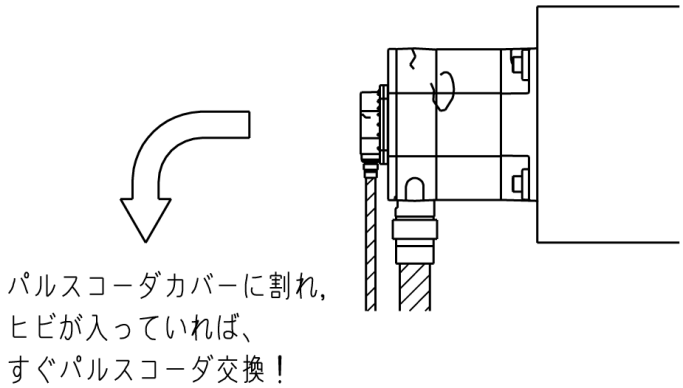

(3) Stains and smudges
Check the motor surface and bolt holes for oil or coolant.
Wipe off oil and coolant on the motor surface periodically. Oil or coolant can damage the coating by chemical reaction, possibly leading to a failure.
Also check how such a liquid leaks onto the motor, and repair if needed.
Wipe off oil and coolant on the motor

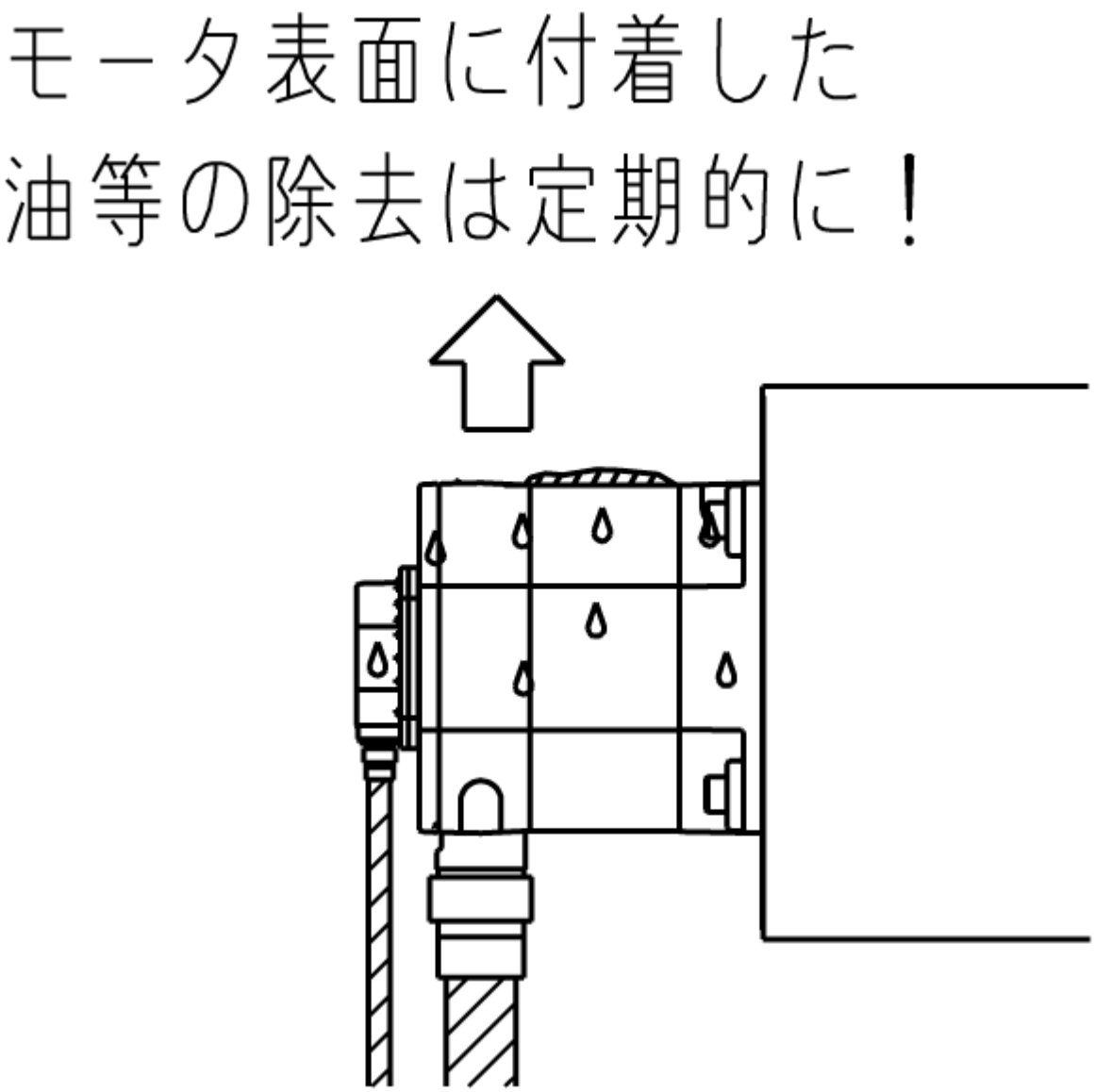

surface periodically.

(4) Overheating

Check to see if the motor is too hot during normal operation.
Attach a thermolabel on the motor surface and check it visually to see if the motor becomes too hot during normal operation.

CAUTION

Temperature on the motor surface can exceed 80°C under some conditions. Never touch it by the hand.

Attach a thermolabel and check it visually.

サーモラベル等を
貼り目視検査を！

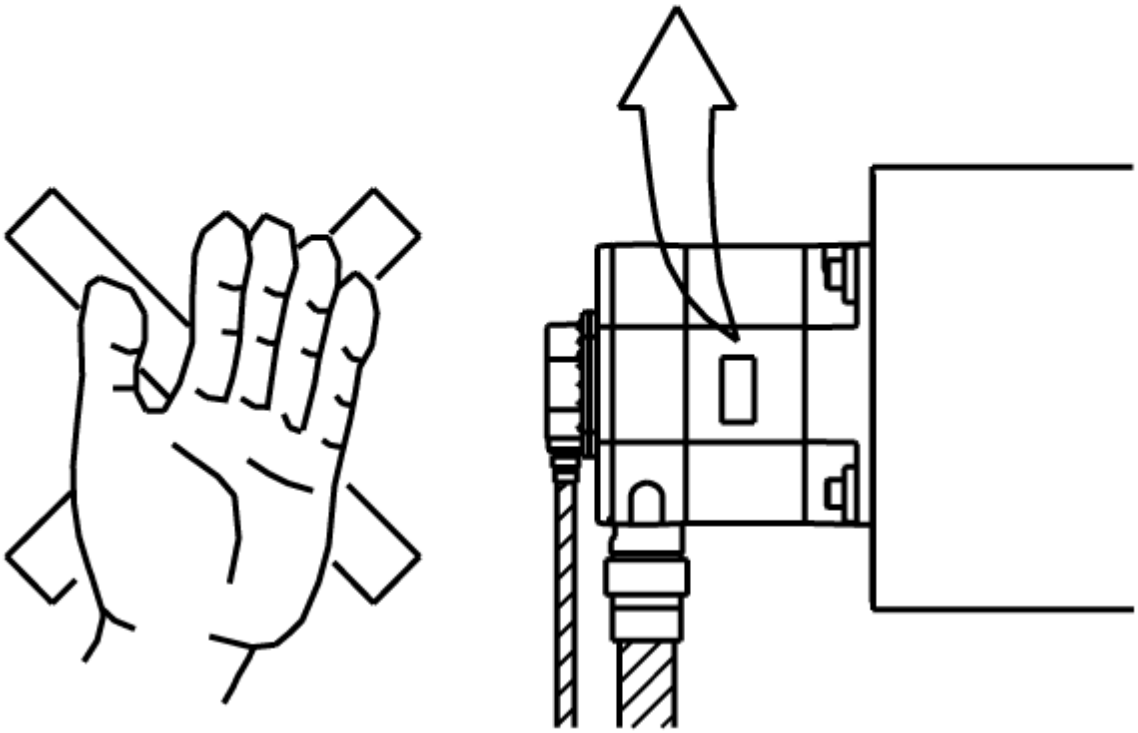

PRD_2015-011_CNC:
Spindle/Servo Motor Checking

Please practise all safety measures while working on Motor's

DO’s & DONT’s – Servo/Spindle Motor

Avoid impact or excessive force on the motor shaft It will damage motor parts.

Do not machine on the motor parts this will result in deformation of the motor hardware’s.

Protect the motor from water, oil, solvent and other chemicals that may damage the motor insulation, and from conductive dust that may cause shorts in the motor.

The following illustration identifies the most vulnerable areas for coolant entry.

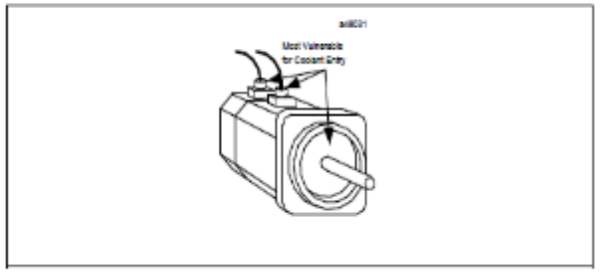

Figure 1 - 1. Coolant Entry

DO’s & DONT’s – Servo/Spindle Motor

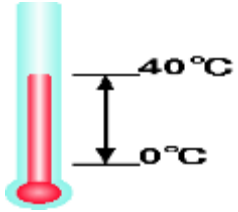

Do not heat or cool if it is unnecessary and to be kept away from continues cooling or heating elements. Duty Cycle

Some magnetic elements are used for a sensor and must be kept away from magnetic fields. A screw driver which had magnetic tip may damage the sensor.

How to Judge A Motor Condition (1/2)

- **<u>Please read the motor Specification before checking any motor</u>**
- Physical condition of the motor by visual inspection like
    1. Physical damage to motor structure
    2. Deformation to coupling parts like Shaft and Flange surface
- Electrical Check like measuring
    1. Winding Insulation test
    2. Winding Resistance test
    3. Winding Surge test
    4. Rotor Back EMF test

How to Judge A Motor Condition (2/2)

- Mechanical Checks like
    1. Runout of coupling shaft
    2. Face-out in mounting flange surface
    3. Radial & Axial play on the shaft
    4. Runout in sensing gear assembly (Spindle Motor Only)
    5. Noise during rotating the shaft by hand
    6. Vibration check, Etc.,

Insulation Test

- To test for electrical leakage in winding
- They are helpful in detecting issues like leakage that other devices, such as the ohm detector, might not
- This is because you will actually be running current through the device while you are testing it

Insulation Test

- Set the Voltage Level as 500 / 250 VDC
- Connect Ground lead to the body of the Motor
- Press the Start Button on the Megger unit to record readings
- Press the Red Push Button on the Red Probe while making contact with winding terminals
- Make contact with each phase on the power terminal of the motor R/Y/B/G
- Measure the values of each phase

Insulation Test

Unit Set

Connect

Test Probe

Insulation Test

Motor Terminals

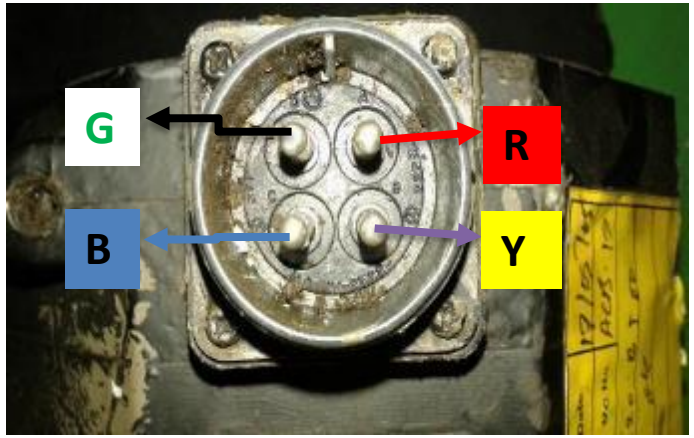

Testing

Insulation Test

Motor Body

Stator body to ground Resistance will always be 0 Ω

No Good Condition

Measured value <100MΩ
Winding Deteriorating

Good Condition

Measured value >500MΩ
Winding in Good condition

Insulation Test

- Judgement with measured value respect to motor body and each winding

Greater than 100 MΩ	Satisfactory
10 to 100 MΩ	The motor has started to deteriorate. Performance is not affected but periodic inspection is required.
1 to 10 MΩ	The motor has deteriorated to a degree where performance may be adversely affected. Periodic inspection is required.
Less than 1 MΩ	Defective. Replace the motor.

Resistance Test

- Judgement with measured value respect to motor body and each winding
- The units of measure for Resistances <1Ω. 1mΩ (1mω) is equal to one thousandth of an ohm (0.001 ω)
- The resistance between the phase windings R-Y, Y-B & B-R are measured

Resistance Test

- Judgement with measured value respect to motor body and each winding
- The units of measure for Resistances <1Ω. 1mΩ (1mω) is equal to one thousandth of an ohm (0.001 ω)
- The resistance between the phase windings R-Y, Y-B & B-R are measured

Resistance Test

- Press Power ON button on the unit
- Clip two test probes (Step1)
- Press SHIFT (Step2) and than hold to AUTO (Step3) adjust to calibrate the probe to zero

Step 1

Step 2

Step 3

Resistance Test

Measure	Good Winding	NO Good Winding
R - B		
R - Y		
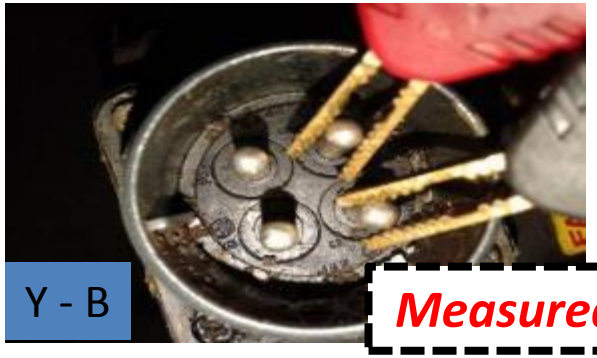 Y - B		

Measured values Tolerance should be <10 % between difference phases

Surge Test

- Use extremely short high voltage pulses to test electric windings and their insulation
- This surge creates A voltage difference between turns
- The turn-to-turn phase-to-phase insulation is tested for its quality
- Circulating currents in that shorted loop generate excess heat that eventually deteriorates the ground insulation

Note: Surge Test should be done with bear stator assembly only

Surge Test

Tester Setup

- Connect the stator body to the ground lead of the Surge tester
- Clip the R, Y & B to the Power leads of the Surge tester
- Power On the unit by pressing Power button
- Set Surge mode in the FUNCTION select
- Set test voltage selector to 1000 & above in Volts/div
- Rotate the selector to select the phase combination

Note: Surge Test should be done with bear stator assembly only

Surge Test (for Servo Motor)

Surge Test (Unit Setup)

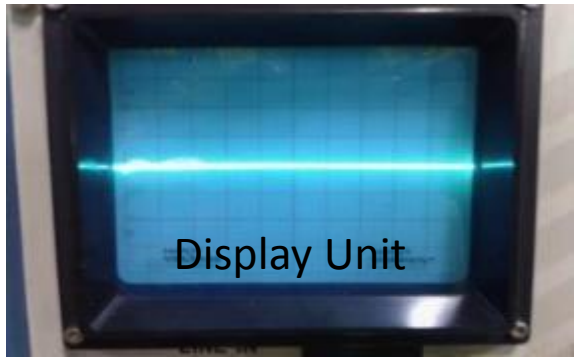

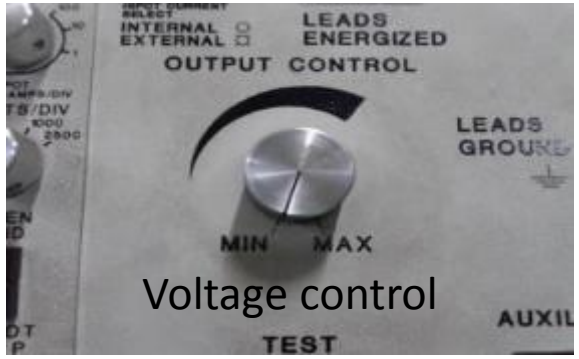

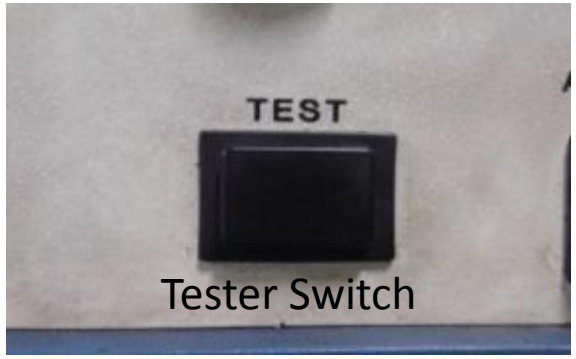

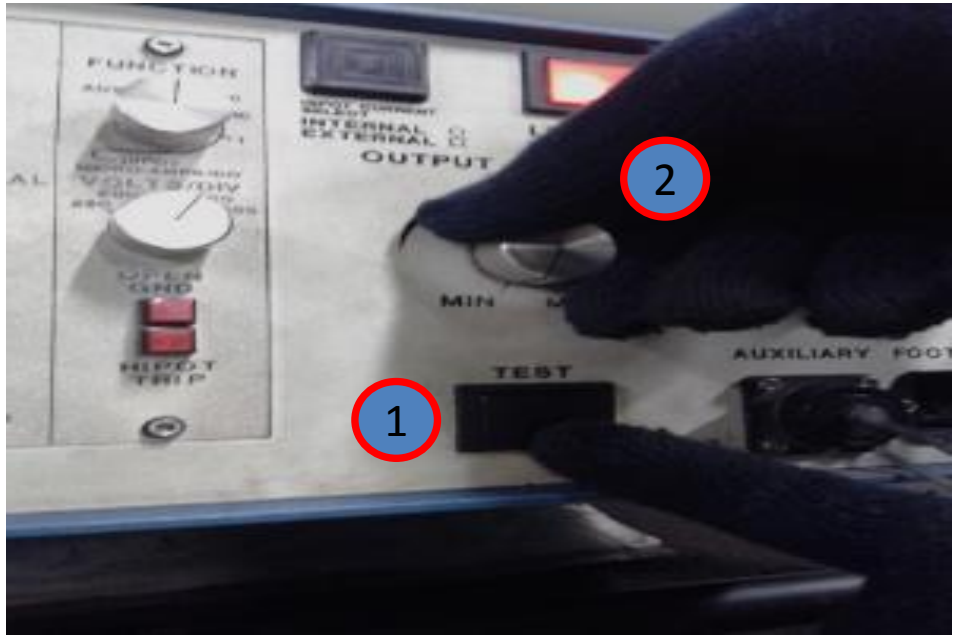

1. Press the TEST Push Button (# HOLD)
2. Rotate the OUTPUT CONTROL Knob to vary the voltage from minimum to maximum

Surge Test

1. Press the TEST Push Button (# Hold)
2. Rotate the OUTPUT CONTROL Knob to vary the voltage from minimum to maximum
3. Once waveform appears on the display
4. Bring back the control knob to minimum position
5. Release the test push button(#Release)
6. Switch the phase selector to next phase combination
7. Repeat Steps 1~6 again and measure for all possible phase selection

Surge Test (Test)

Phase Selector Combo

No Good Winding Condition

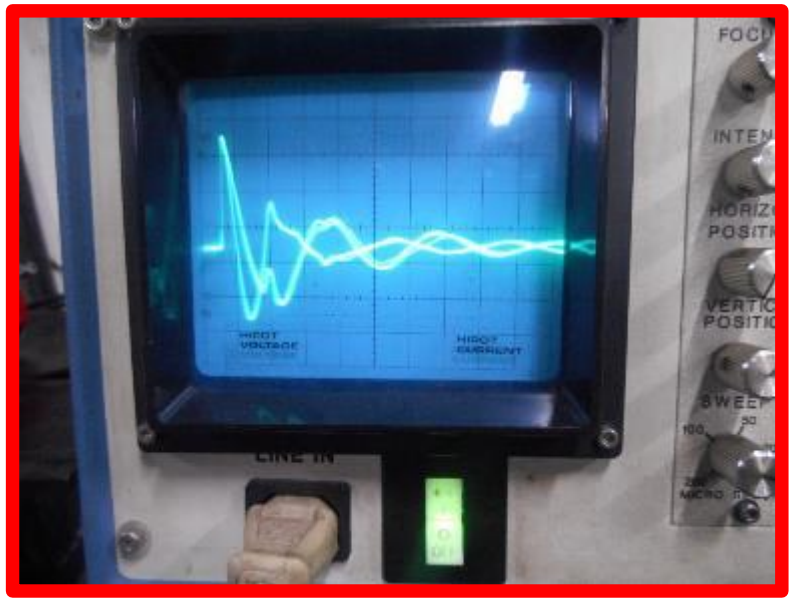

Good Winding Condition

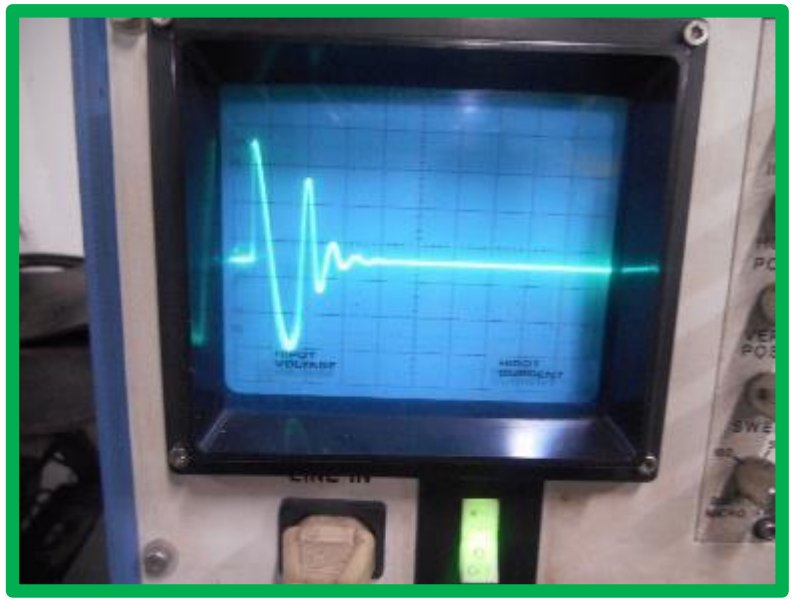

- **For healthy winding all 2 waveforms will merge with each other and will be unique on the display**
- **For defective winding all 2 waveforms will be at different levels on the display**

Surge Test - Judgement

1. Turn-to-turn insulation weakness, incipient faults and all winding problems are immediately visible on the display screen with Surge Test
2. Tester applies two identical pulses to two windings or phases under test
3. This produces two wave patterns on the display
4. If the windings match, their patterns will superimpose
5. A fault produces two separate patterns

Reason for Surge Failure

- A majority of insulation faults start as weakness in the turn insulation
- Holes in the wire insulation and damage during the winding process lead to shorts and quality problems
- Ageing during operation reduces the dielectric strength of the turn insulation

Back EMF Test

- This indicates the strength of the permanent magnet of motor rotor
- This test applicable for motors with permanent magnet rotor
- Back EMF - Voltage generated by winding, when the rotor is externally rotated by mechanical drive (Preferred variable speed)
- Back EMF is a motor-specific constant, calculated by the flux distribution and location of coils in the armature and the dimensions of the motor

Back EMF Test

- Select the suitable coupler for the diameter of the motor shaft
- Couple the motor and induction motor with the help of coupling unit and aline to center
- Connect the 3 phase power cable to the motor power connector

Back EMF Test

- The speed of the induction motor is controlled by the Frequency Invertor drive.
- Frequency is set accordingly using the formula, F(Hz)=(N*P)/120
- If N = 1000 rpm; P = 4 (Poles); Therefore, F = 33.33 Hz
- Please adjust the Frequency Variac to set the calculated value

Back EMF Test

- Adjust the Frequency Variac to set the frequency in the invertor
- Select the phase to be measured with Winding phase selector
- Actuate the induction motor using toggle switch FRD/REV direction.
- Measure the voltage from the Back EMF voltage display unit.
- Take readings for both FWR&REV direction for each phase.

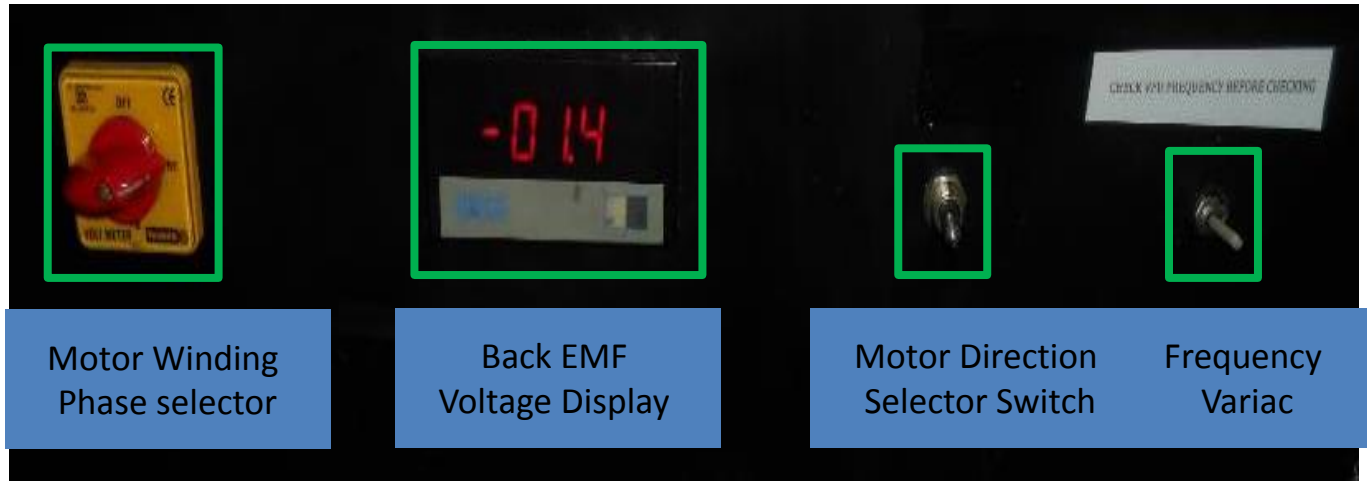

Back EMF Test

- Please refer the motor specification sheet for Back EMF voltage of each motor model calculated at 1000RPM

- Back EMF value should be as per motor specification sheet
- 10% tolerance is allowed for both forward and backward direction in three phases

Parameter	Symbol	Value			Unit
Stall Torque (*)	Ts	2 20			Nm kgfcm
Stall Current (*)	Is	3.3			A (rms)
Rated Output (*)	Pr	0.75 1.0			kW HP
Rating Speed	Nr	4000			min^{-1}
Maximum Speed	Nmax	5000			min^{-1}
Maximum Torque (*)	Tmax	7.8 80			Nm kgfcm
Rotor Inertia	Jm	0.000291 0.00297			kgm^2 $kgfcms^2$
Rotor Inertia (with Brake)	Jm	0.000311 0.00317			kgm^2 $kgfcms^2$
Torque constant (*)	Kt	0.61 6.2			Nm/A (rms) kgfcm/A (rms)
Back EMF constant (1phase) (*)	Ke Kv	21 0.20			V (rms)/1000 min^{-1} V (rms)sec/rad
Armature Resistance (1 phase) (*)	Ra	1.4			Ω
Mechanical time constant	tm	0.003			s
Thermal time constant	tt	15			min
Static friction	Tf	0.1 1			Nm kgfcm
Weight	w	2.8			kg
Weight (with Brake)	w	3.8			kg
Maximum Current of Servo Amp.	Imax	20			A (peak)

Mechanical Test

- It is the measure of a shaft's deviation from an absolute uniform radius as the circumference of the shaft is traversed
- Run-out is dynamic and cannot be compensated
- Radial shaft run-out is a measurement of radial displacement of the shaft surface as the shaft turns
- Radial run-out is perpendicular to the axis of rotation
- Axial shaft run-out is a measurement of the axial displacement of the shaft as it rotates
- Off-center measurements are called “face run-out” in which the flatness and square-ness of the surface are measured.

Mechanical Test - General

Radial/Axial

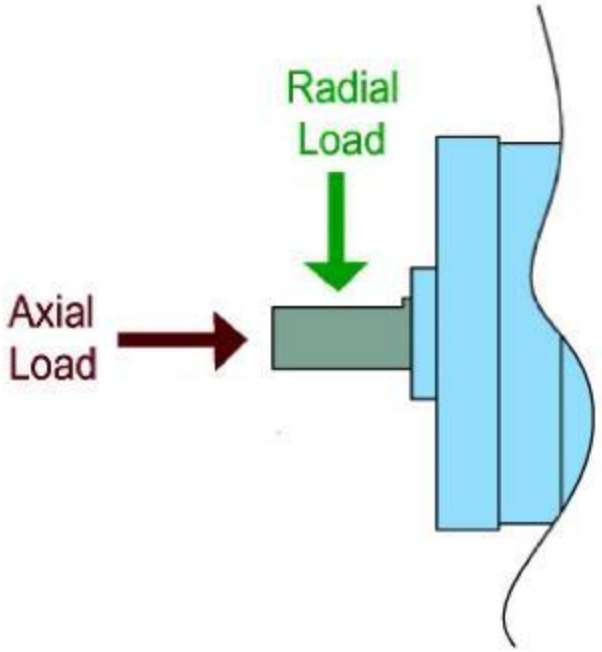

Runout

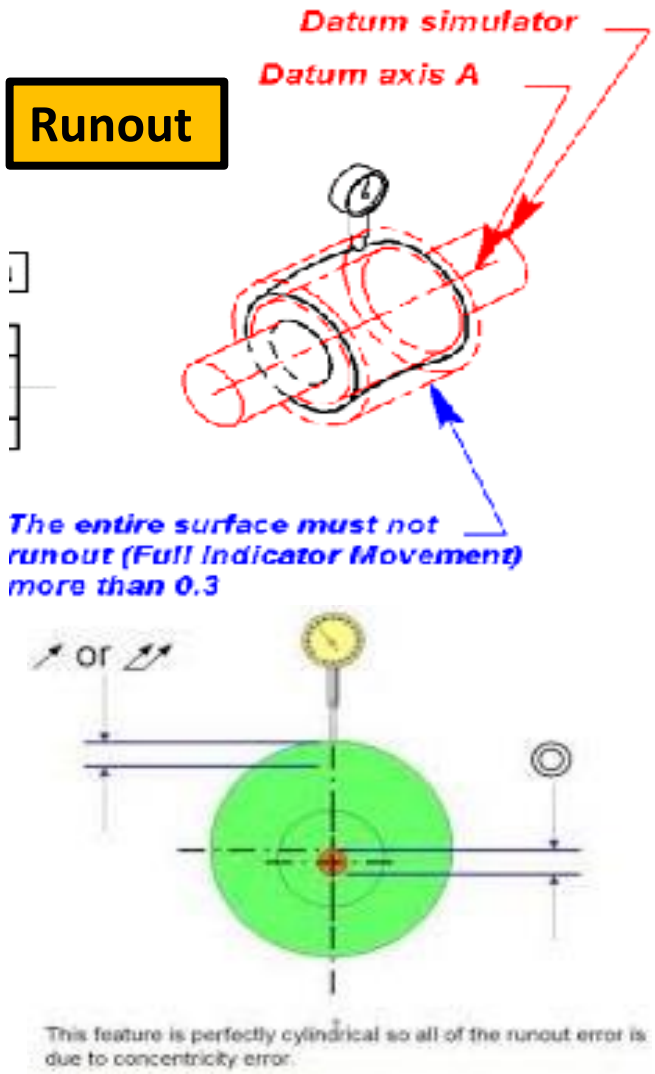

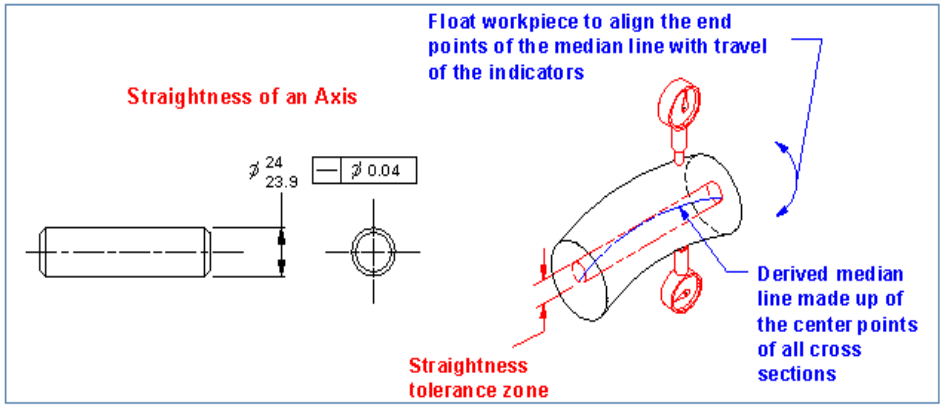

Face out

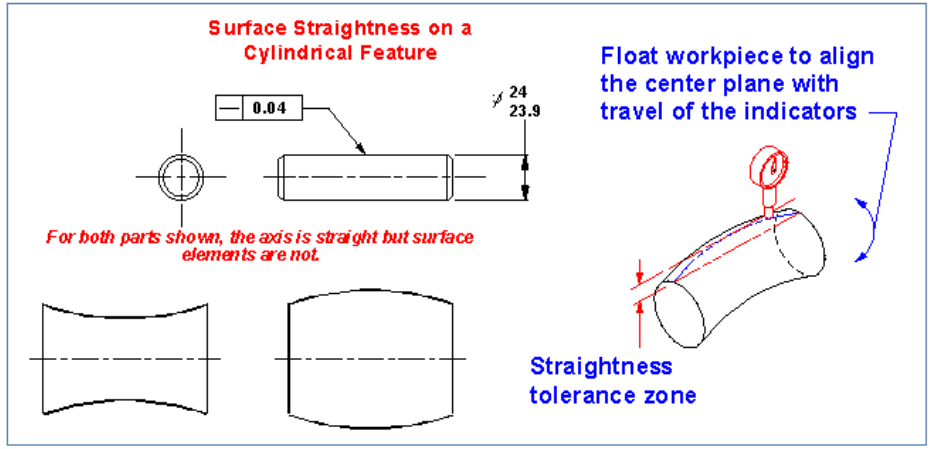

Mechanical Test - Specification

Run-out at the end of the output shaft	20μm or less	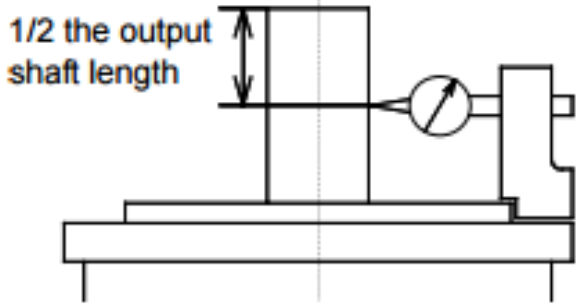
Run-out of the faucet joint for mounting the flange against the core of the shaft (only for flange type)	40μm or less	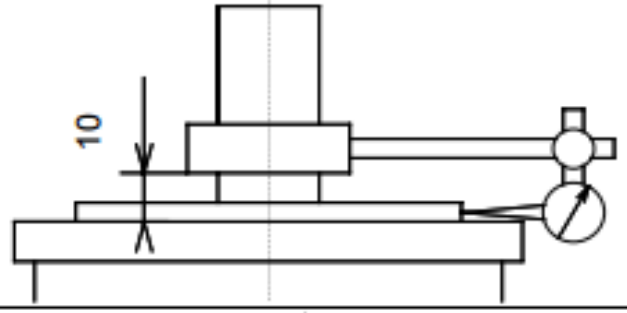
Run-out of the flange mounting surface against the core of the shaft (only for flange type)	80μm or less	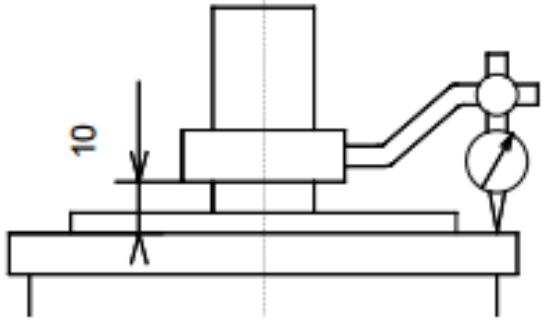

Mechanical Test – Front Side

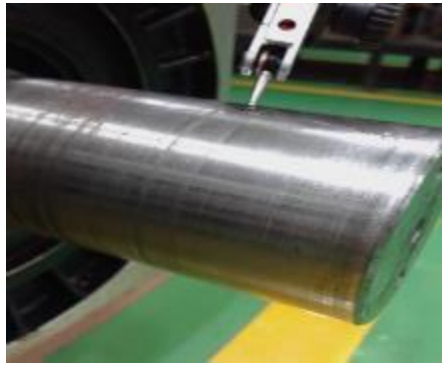

- Place the dial gauge stand on the flat surface possibly parallel to the motor shaft
- Make the dial gauge tip contact perpendicular to the motor shaft
- As the dial gauge tip was in contact with the rotor shaft, set zero on the indicator
- Rotate the rotor shaft and measure the deflection on the dial gauge and reading should be <0.010mm

Mechanical Test – Front Side

- Fix V-block to the circumference of the shaft
- Set the dial gauge to zero after making contact with the front flange
- Rotate the shaft slowly and read the values in dial gauge
- Repeat this test for flange surface also
- The dial gauge reading should not exceed <0.030mm (Circle) <0.040mm for face

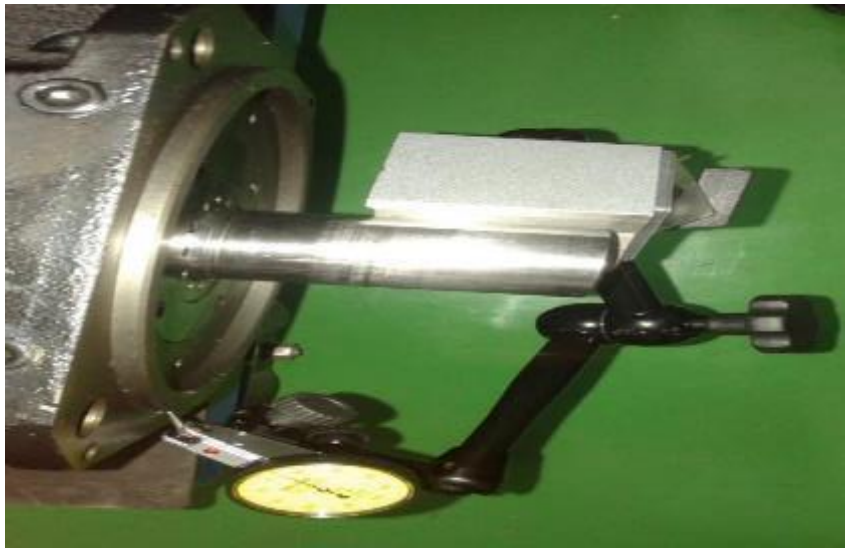

Mechanical Test – Rear Side

- Fix the gauge on the flat fixed surface – reachable to the rear shaft/gear
- Make it zero after making contact with the rear shaft circumference
- Rotate the rotor shaft and observe the readings in dial gauge
- The dial gauge reading should not exceed <0.010mm (Circle & Face)

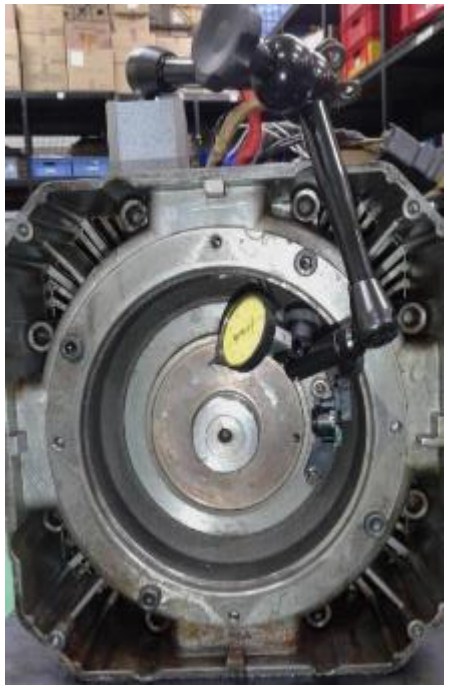

Spindle Sensor - Basic

- Used to detect speed or position depending upon application demand
- The output signal (PA/PB) will be sinusoidal with 5VDC Peak to Peak

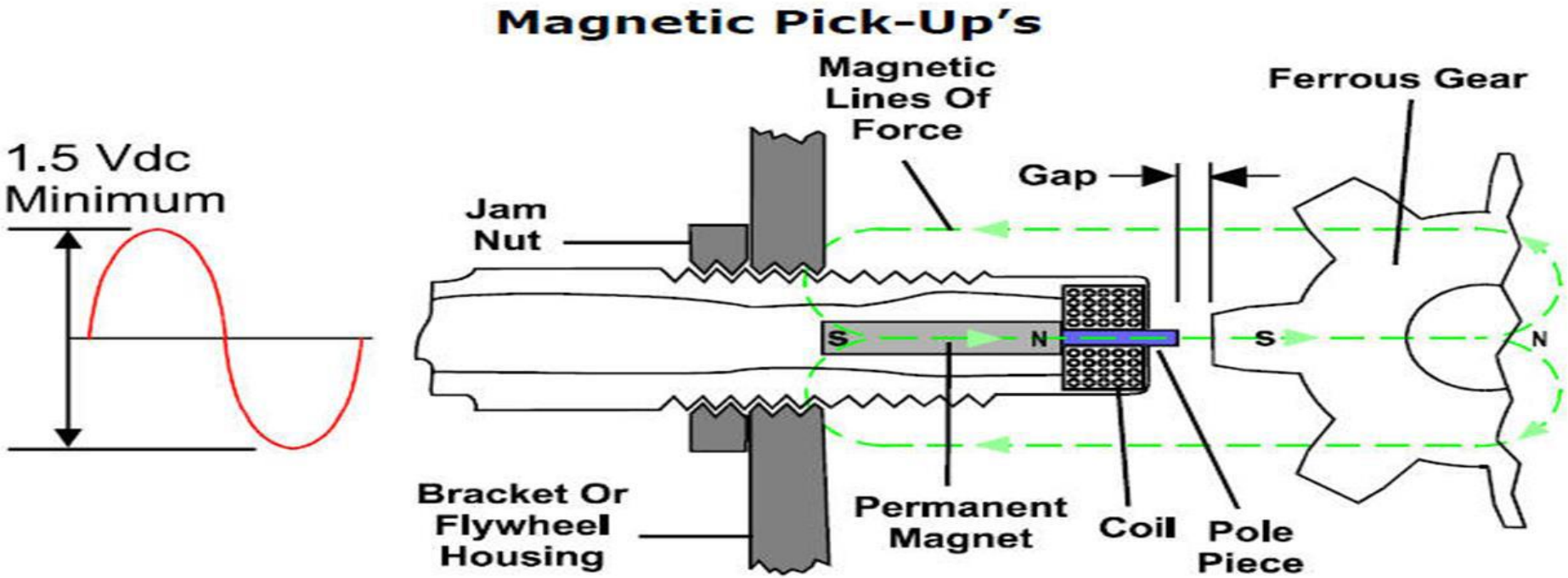

Spindle Sensor - Basic

- Mi, Mzi, Bzi & Czi are the different sensors used to detect spindle speed

Spindle Sensor - Basic

- Mi, Mzi, Bzi & Czi connector info for signal check

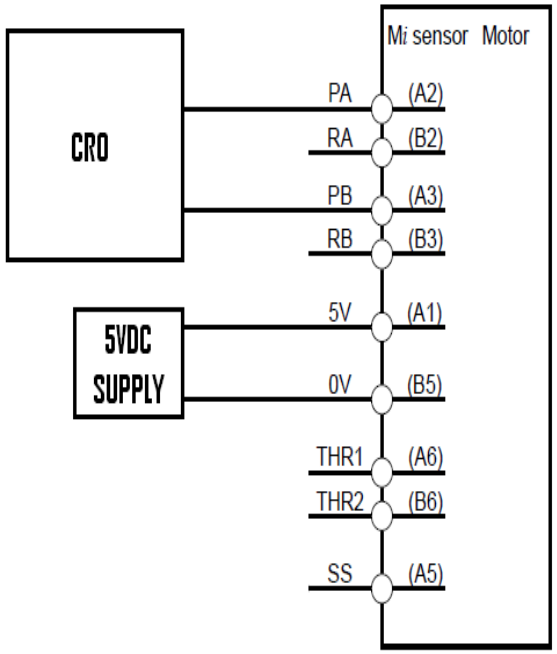

A1	+5V	B1	
A2	PA	B2	RA
A3	PB	B3	RB
A4		B4	
A5	SS	B5	0V
A6	THR1	B6	THR2

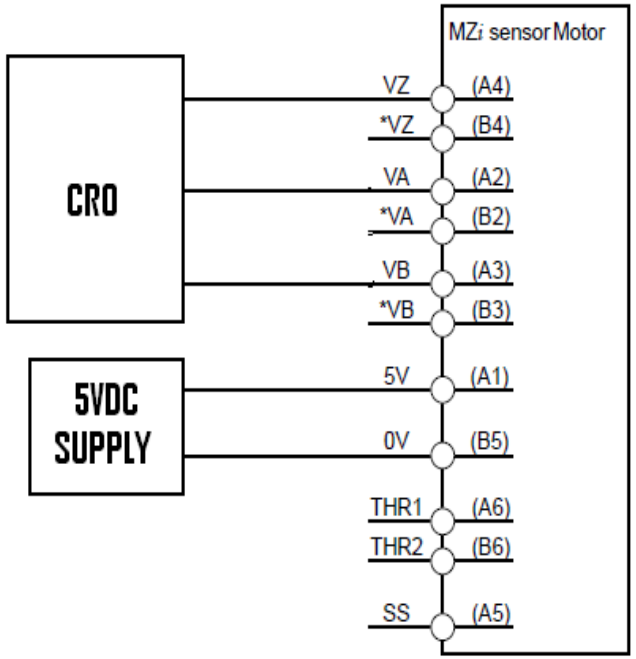

A1	+5V	B1	
A2	VA	B2	*VA
A3	VB	B3	*VB
A4	VZ	B4	*VZ
A5	SS	B5	0V
A6	THR1	B6	THR2

Spindle Sensor - Basic

M & B Type Sensor Waveform

Measurement location	Measurement condition	Sample waveform
PA1, PB1 Separate sensors PA2, PB2	The speed must be 1500 min^{-1} or less. Rotation direction: CW 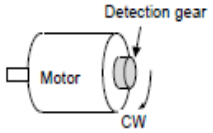	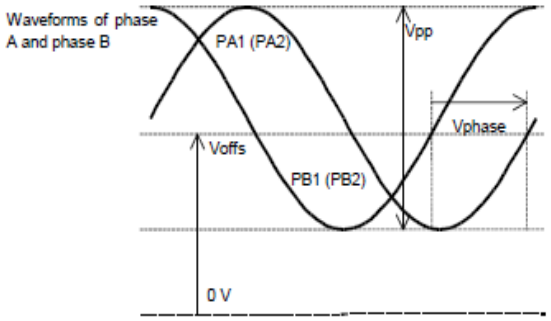 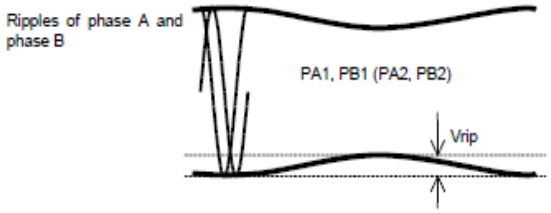
PS1 Separate sensor PS2		For αi MZ and αi BZ sensors only 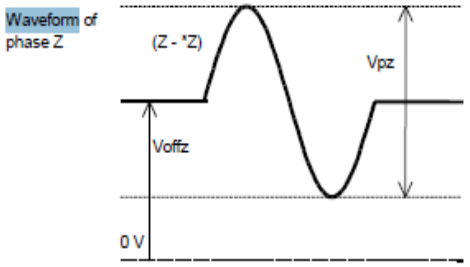

C Type Sensor Sensor Waveform

Measurement location	Measurement condition	Sample waveform
PA2, PB2	CW rotation direction as viewed from the flange	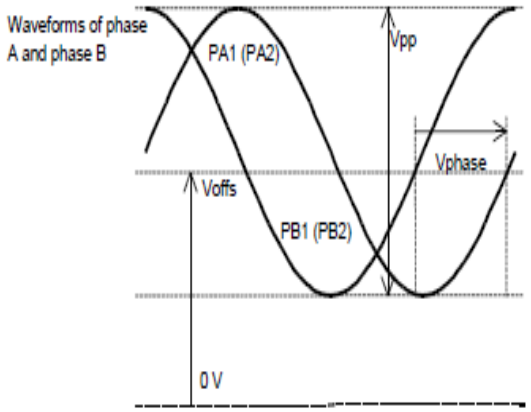 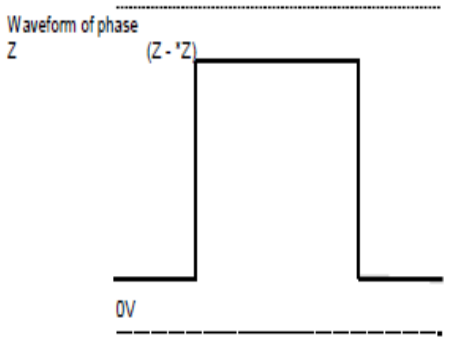

Spindle Motor Fan - Cleaning

How to avoid noise in spindle cooling fan?

Please apply lubricant by using squirt can or skewer

1.Take off fan motor from spindle motor

2. Air blow

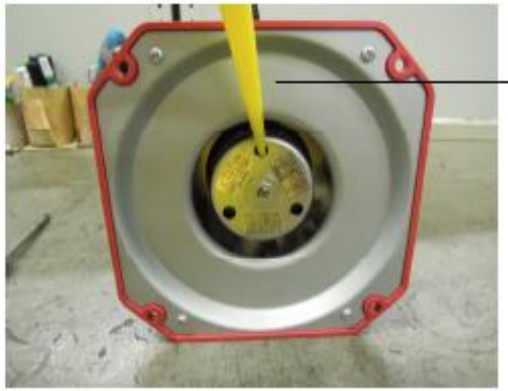

Squirt can

3. Air blow on opposite side

4. Air blow in drain hall

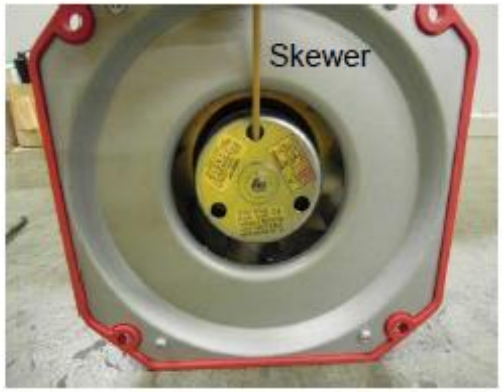

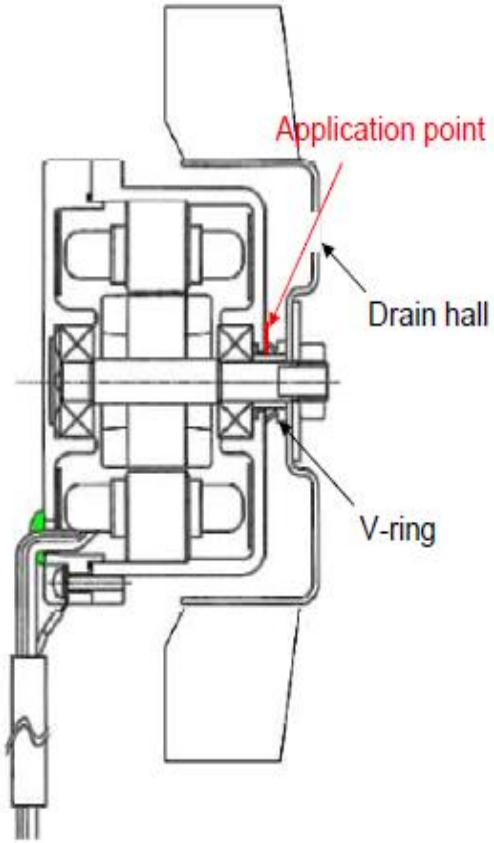

Cross-section of fan motor